Fork Lift Basket TK-503 / TK-504 / TK-505

Product information

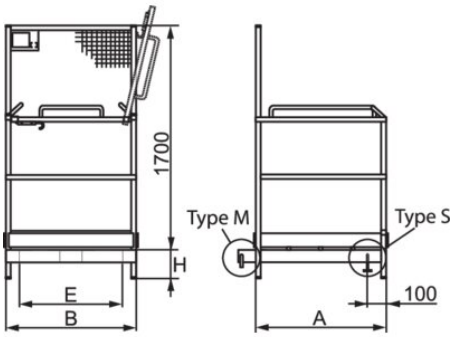

General: Instead of ladders and scaffolding, fork lift baskets are often a better solution for temporary jobs. Our range of standard baskets are suitable for the majority of fork lifts on the market. Only work of a temporary nature, such as maintenance, inspection and survey work, may be carried out.
Design: Load-bearing welded hollow-beam construction with scuff plate, and nonslip flooring of expanded metal. The basket has a protective grille on the truck frame, tubular handrails, a lockable boom, and a locking device for thecounterbalance option as well as fork lifts with stabilizer legs. The choice of basket has to take into account the type of truck, the lifting capacity, and the width.
TK-503: Designed for counterbalanced fork lifts — no legs.
TK-504: Designed for counterbalanced fork lifts — with legs.
TK-505: Designed for fork lifts with stabilizers — with legs.

Proof: Function tested.

... *Read more*

Material: Hollow-beam and plate of high-strength structural steel.
Marking: Sign according to standard SS 3628.
Finish: Yellow painted.
Note: Before use basket and fork lift has to be initially inspected together.

CERTEX Svenska AB
info@certex.se
08-758 00 10

© November 2026 - All Rights Reserved

Fork Lift Basket TK-503 / TK-504 / TK-505

Blueprint

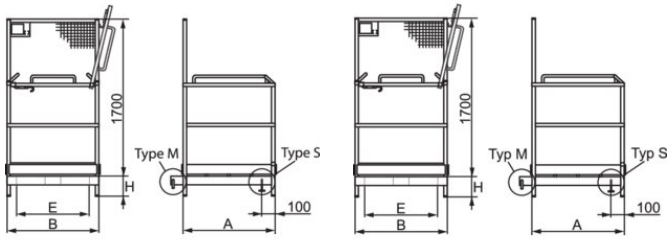

Lifting table

Part code	Code	WLL ton	Basket weight kg	Door type	Locking device*	Fork tubes mm	Max. number of persons	A mm	B mm	E mm	H mm	Weight kg
6225TK503	TK-503	0.215	85	Boom	M	155x60	1	1,000	1,000	894	70	300
6225TK504	TK-504	0.3	100	Boom	M	220x100	2	1,200	800	594	240	400
6225TK505	TK-505	0.3	100	Boom	S	220x100	2	1,200	800	594	240	400

CERTEX Svenska AB
info@certex.se
08-758 00 10
© November 2026 - All Rights Reserved