Fork Lift Basket: TK-510

Product information

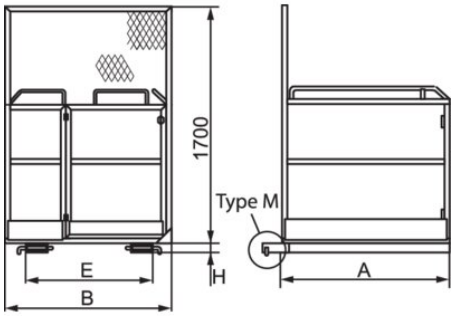

General: Instead of ladders and scaffolding, baskets are often a better solution for temporary jobs. Our range of standard baskets are suitable for the majority of fork lifts on the market. Only work of a temporary nature, such as maintenance, inspection and survey work, may be carried out.
Design: Load-bearing welded hollow-beam construction with scuff plate, and nonslip flooring of expanded metal. The basket has a protective grille on the fork lift frame, tubular handrails, a lockable gate, and a locking mechanism for counterbalance truck.

Proof: Function tested.

... *Read more*

Material: Hollow-beam and plate of high-strength structural steel.
Marking: Sign according to standard SS 3628.
Finish: Yellow painted.
Note: Basket weight 160 kg
Warning: Before use basket and fork lift has to be initially inspected together.

CERTEX Svenska AB
info@certex.se
08-758 00 10
© November 2026 - All Rights Reserved

Fork Lift Basket: TK-510

Blueprint

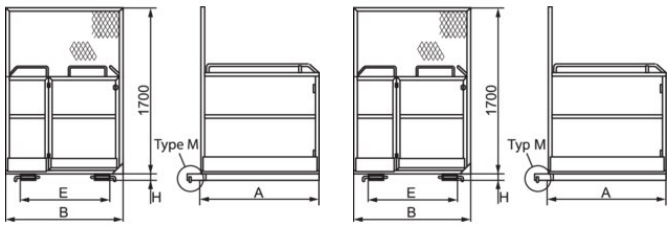

Lifting table

Part code	Code	WLL ton	Door type	Locking device*	Forktubes mm	Max. number of persons	A mm	B mm	E mm	H mm	Weight kg
6225TK510	TK-510	0.34	Gate	M	155x60	2	1,200	1,200	894	70	500

CERTEX Svenska AB
info@certex.se
08-758 00 10

© November 2026 - All Rights Reserved